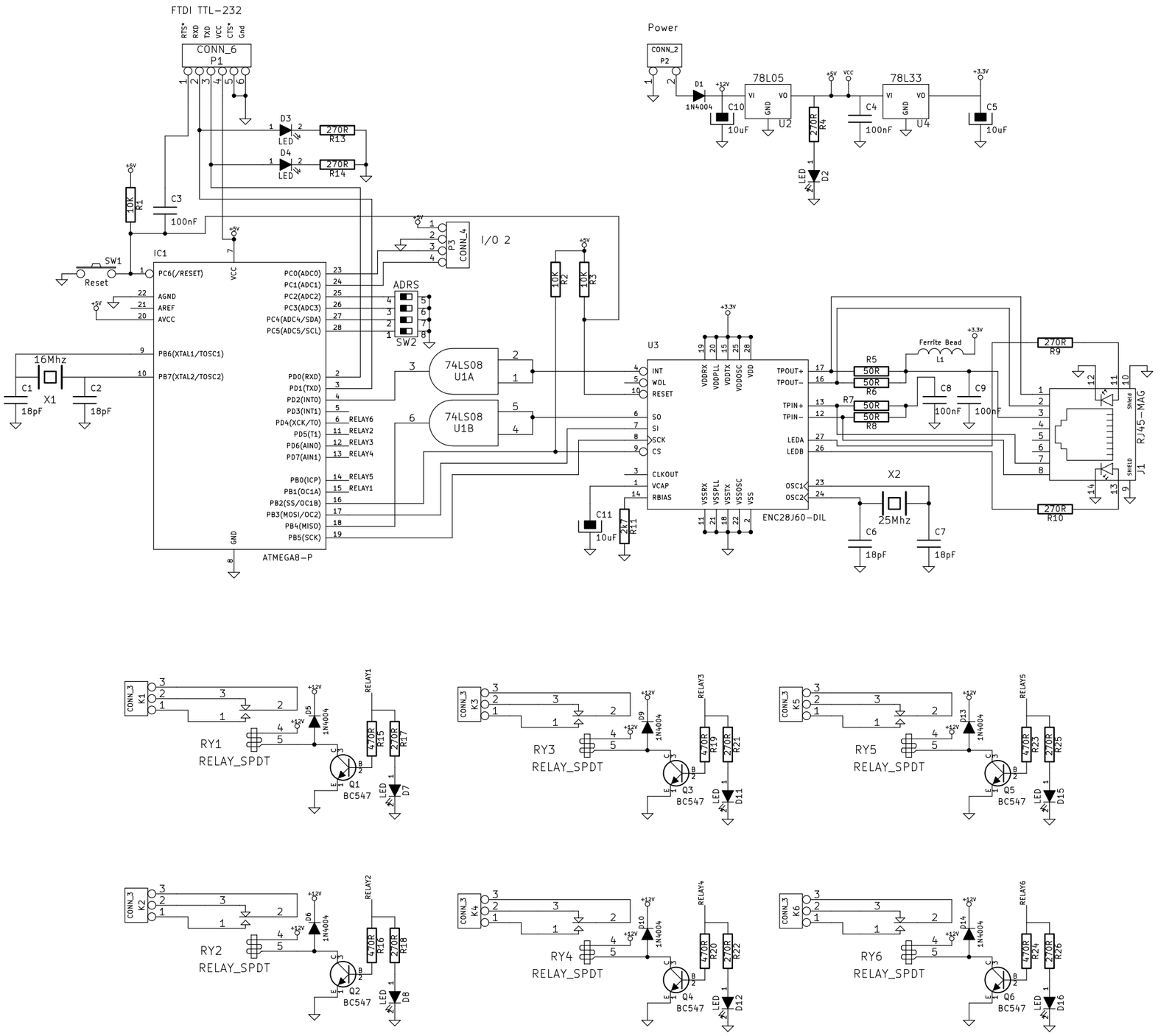

File: Ethernet-Relay-Controller.sch		
Sheet: /		
Title: Ethernet Relay Controller		
Size: A3	Date: 5 sep 2010	**Rev:**
KiCad E.D.A. eeschema (2010-05-05 BZR 2356)-stable		Id: 1/1